Appearance		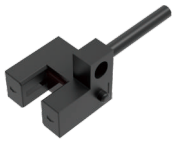	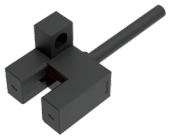		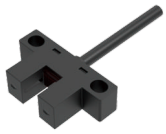
Shape	U shape	F shape	R shape	L shape	K shape
Sensing distance	5mm (Slot width)				
Standard sensing object	Opaque objects (Size: > 0.8*1.2mm)			Opaque objects (Size: > 1.2*1.8mm)	Opaque objects (Size: > 0.8*1.2mm)
Repeat accuracy	< 0.03mm				
Output type	NPN or PNP open-collector				
Switch type	Selectable L.on/D.on				
Indicator	Light off when objects are detected; light on when no ojects are detected				
Response frequency	3KHz				
Light source	Infrared LED (940nm)				
Operating voltage	5~24V DC				
Voltage drop	< 1V(Load current 50mA)				
Current brightness	≤8mA			≤16mA	≤8mA
Protective circuit	Surge protection , Reverse polarity protection				
Ambient brightness	Incandescent lamp< 1000 Lux				
Ambient temperature	Operation:-25℃~+55℃, Storage: -30℃~+80℃,no freezing				
Ambient humidity	Operation:5%~85%, Storage: 5%~95%, no condensation				
Withstand voltage	AC, 1000V for 1 minute, between all power connection terminals and housing				
Anti-vibration	10 to 2000 Hz with 1.5mm(Maximum acceleration 196m/s²) amplitude for 2 hours each in X, Y, and Z directions			10 to 55 Hz with 1.5mm amplitude for 2 hours each in X, Y, and Z directions	10 to 2000 Hz with 1.5mm (Maximum acceleration 196m/s²) amplitude for 2 hours each in X, Y, and Z directions
Insulation resistance	20MΩ or more between all power connection terminals and housing (based on DC250V)				
Degree of protection	IP50				
Material	ABS+PC			ABS	ABS+PC
Connection method	2M 4core cable				
Model No. NPN	**SU-201NA-W**	**SF-202NA-W**	**SR-204NA-W**	**SL-205NA-W** HOT	**SK-206NA-W**
Model No. PNP	**SU-201PA-W**	**SF-202PA-W**	**SR-204PA-W**	**SL-205PA-W**	**SK-206PA-W**

Remarks: SL-205NA/PA-W, suggest to install with small-head or non-standard M3(diameter less than 5.2mm) screws; for other models, please take regular M3 screws for mounting.

Dimensions

Unit: mm

U Shape

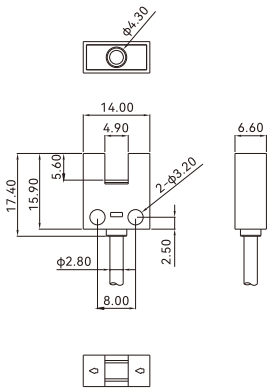

F Shape

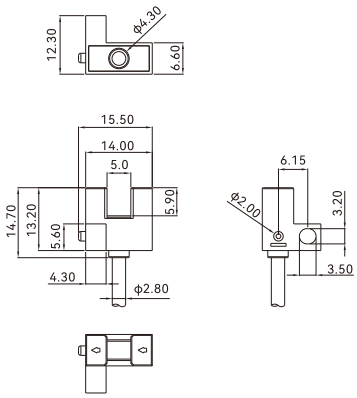

R Shape

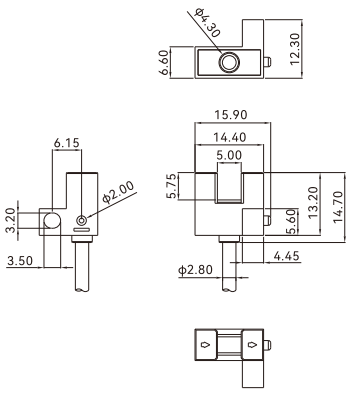

Micro Slot Type

Dimensions

Unit: mm

L Shape

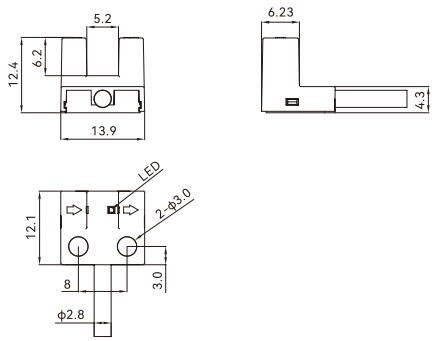

K Shape

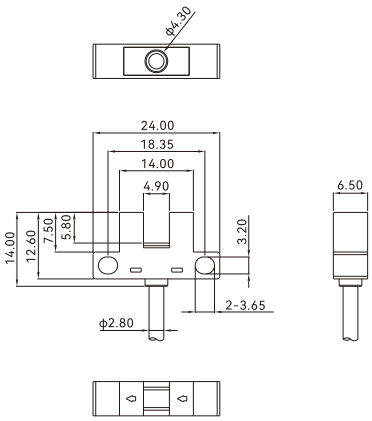

Circuit diagram

NPN

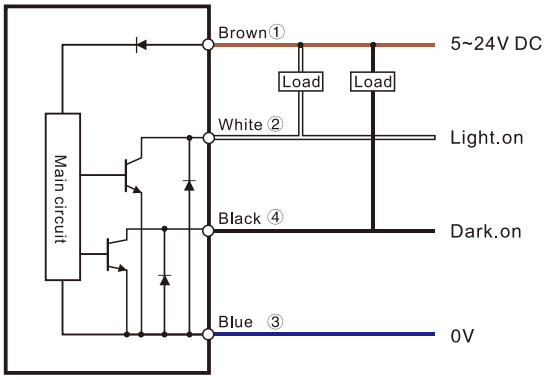

PNP

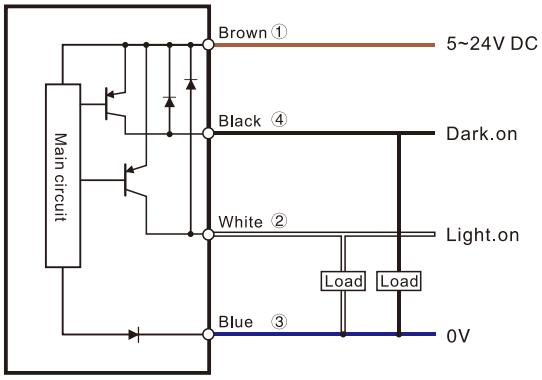

Fiber Optic
Slot Sensors
Photoelectric
Laser
Proximity
Displacement
Magnetic
Contact
Area
Ultrasonic
Vision
Code Readers
Vibration
Temperature
Accessories
Guidance
Slot type sensors
Mirco slot type
Slot type
Wide slot type
Label detection