SPECIFICATION FOR APPROVAL

Film Capacitor for DC-Link application

Customer Code：	
Series / Type：	**DKMJ-X 460μF ±10% 600VDC**
Ordering code：	**1GLZH746D600-01（2020600073）**
Customer's P/N：	
Date：	**17-Oct-2019**

FENGMING ELECTRONIC TECH. CO., LTD.			**APPROVED BY**
Prepared	**Checked**	**Approved**	
Linhao Zeng 17-Oct-2019	Zhanteng Cheng 17-Oct-2019	Carson Song 17-Oct-2019	

MANUFACTURER INFORMATION:

Name: FENGMING ELECTRONIC TECH. CO., LTD.

Address： No.1,Longle road, Huanglong village, Beijiao town, Shunde district, Foshan, Guangdong, 528311,P.R. China

Web site: www.bm-cap.com

Tel: +86-757-223602928 **Fax:** +86-757-23608828

Email: powerelectech @bm-cap.com

■ OUTLINE DRAWING_(mm)

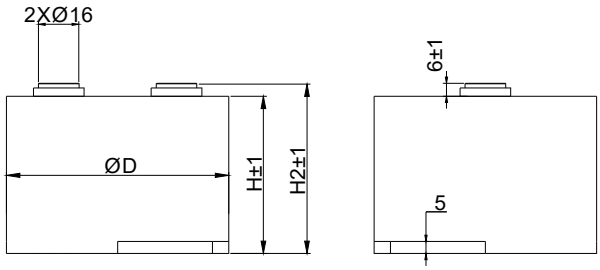

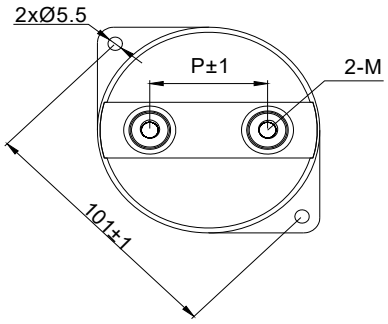

MARK

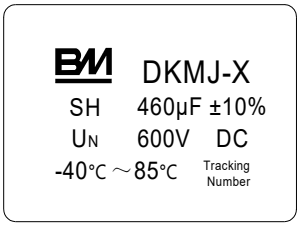

C_N (μF)	U_N (VDC)	ϕ D (mm)	H (mm)	H2 (mm)	P	M
460	600	85	76	82	45	M6

■ APPLICATIONS

Widely used in different kinds of electronic equipment DC link part for DC support,energy storage and filter.

■ FEATURES

- Metallized film, non-inductive structure
- Self-healing property
- High ripple current handling capabilities
- Low ESR, Low ESL
- Long lifetime

■ TEST CONDITIONS

Environment Temperature: T = +20 °C ± 10 °C
Environment Humidity: RH ≤ 65%

■ QUICK REFERENCE DATA

Reference standard		IEC 61071，GB/T17702
Rated capacitance	C_N	460 μF
Capacitance tolerance		±10%
Rated DC voltage	U_N	600 VDC
Operating Temperature Range		-40 °C to +85 °C Θ_{hs}≤85 °C
Storage temperature range		-40 °C to + 85 °C
Tangent of loss angle	tgδ	≤ 0.003 (1kHz)
Test voltage between terminals	U_{t-t}	1.5 x U_{NDC} for 10s
Test voltage between terminal and case	U_{t-c}	3750V.AC
Maximum ripple current	I_{rms}	60A @40 °C
Maximum peak current	I_{peak}	1610A
Maximum surge current	$\hat{I}_S$	4830A
Voltage rise time	dv/dt	3.5V/μS
Equivalent series resistance	ESR (typ)	1.2mΩ
Equivalent series inductance	Ls	30 nH
Insulation resistance (100VDC for 60s)	IR	IR×Cn≥5000s
Thermal resistance	R_{th}	4.6
Creepage distance		33mm
Clearance		29mm
Temporarily Overvoltage (per day)	1.1 x Un, 30% on load duration.	
	1.15 x Un for 30min	
	1.2 x Un for 5min	
	1.3 x Un for 1min	
	1.5 x Un for 100ms each time, 1,000 times during the life of the capacitor.	
Max.Torque of terminals	5N.m	
Failure rate	50FIT	

■ CHARACTERISTICS

